Best-Trans Elec. Corp.,	*Power transformer*		BTE No.			
	Model No.	**BT-AUD-750**	Date	2010. 02. 02	Rev.	

750VA-190/210/230/250V-115V (EI-114x55G)

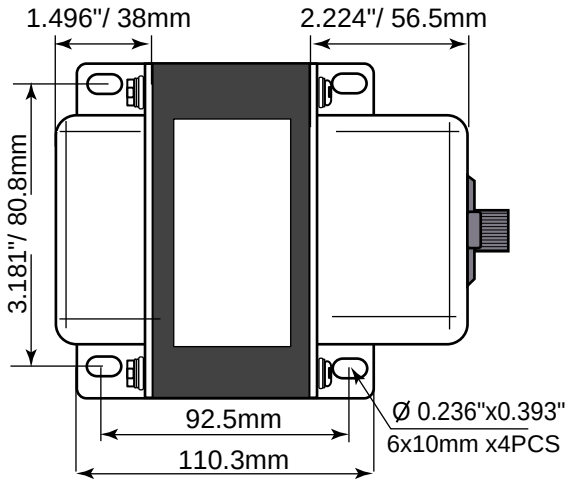

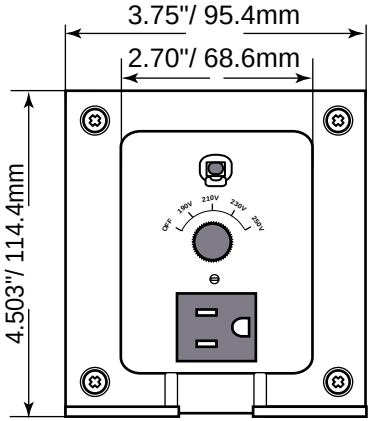

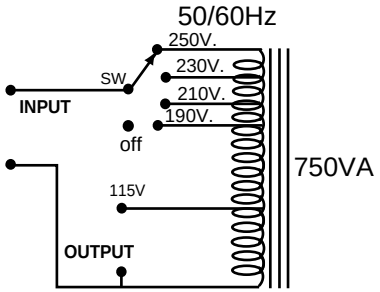

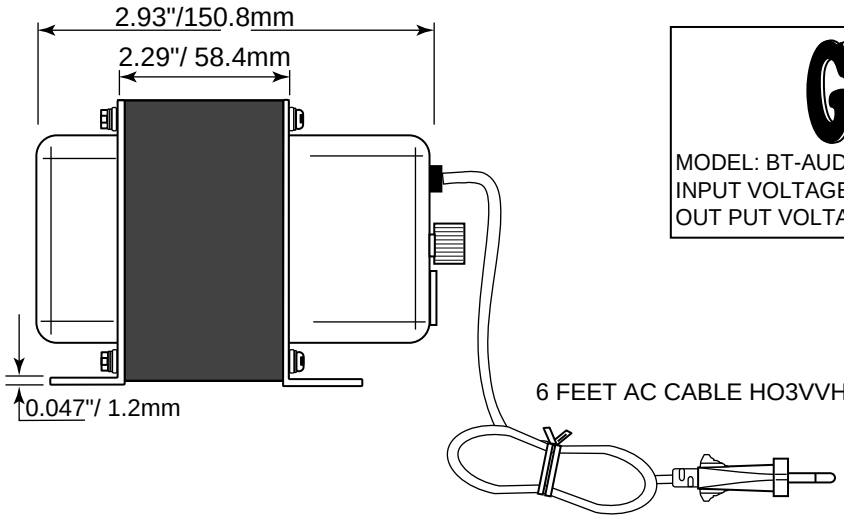

MODEL: BT-AUD-750
INPUT VOLTAGE: 190/210/230/250V50/60Hz
OUT PUT VOLTAGE: 115V -6.522A 750V

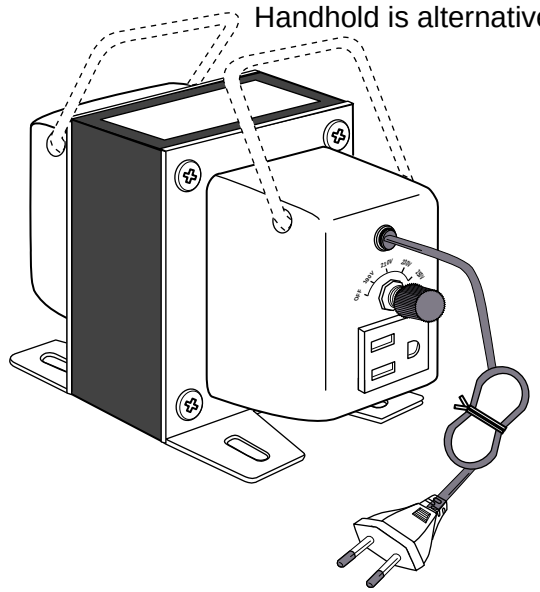

UNIT : inch ± 0.04 ; mm ± 1.0

Report By	Check By	Pages
KHA	Gloria	