Best-Trans Elec. Corp.,	Power transformer		BTE No.			
	Model No.	**BT-AUD-SB-750**	Date	2010. 02. 02	Rev.	

750VA-190/210/230/250V-115V (EI-114x55G)

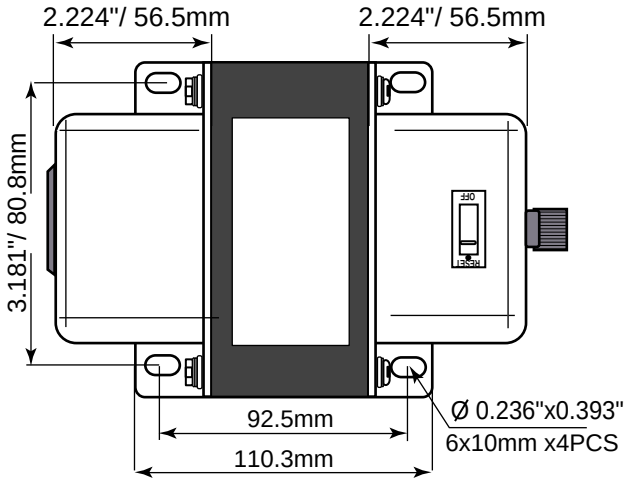

MODEL: BT-AUD-SB-750
INPUT VOLTAGE: 190/210/230/250V50/60Hz
OUT PUT VOLTAGE: 115V -6.522A 750VA

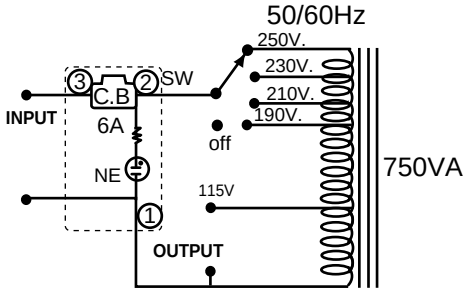

Handhold is alternative

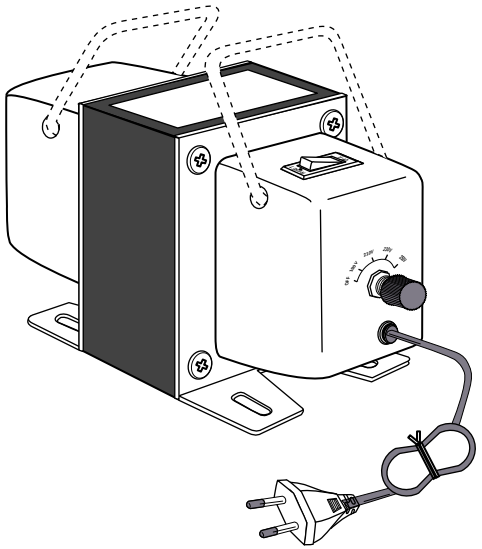

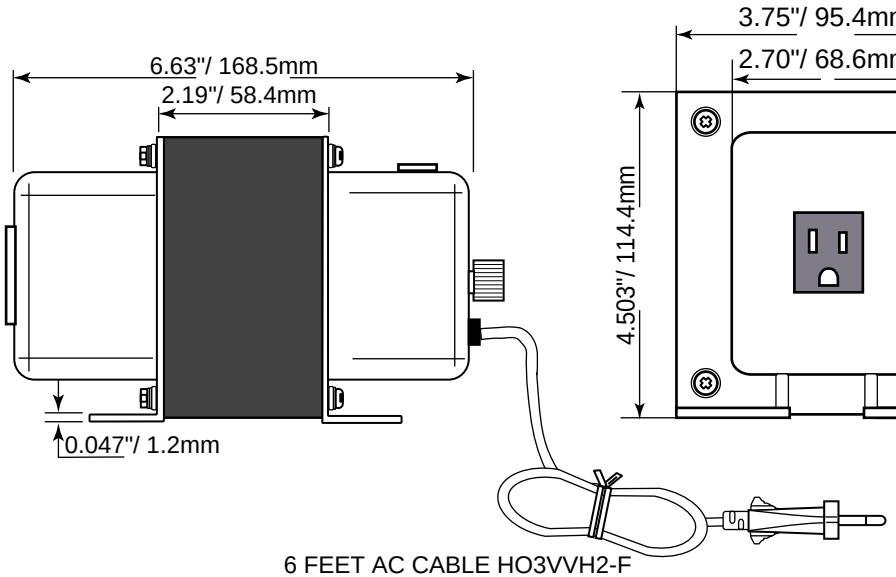

6 FEET AC CABLE HO3VVH2-F

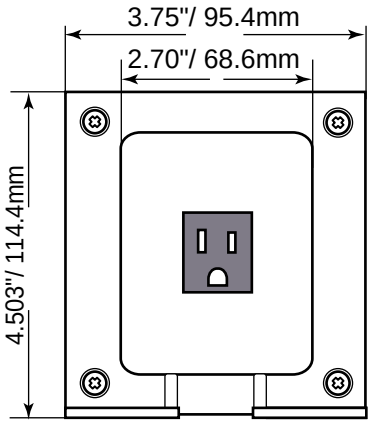

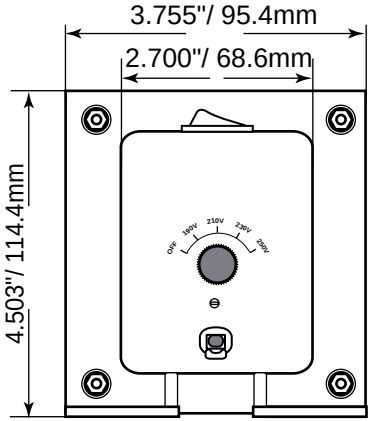

UNIT : inch ± 0.04 ; mm ± 1.0

Report By	Check By	Pages
KHA	Gloria	