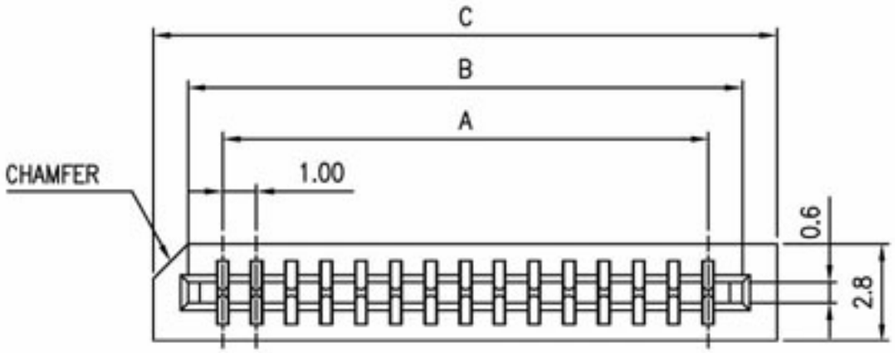

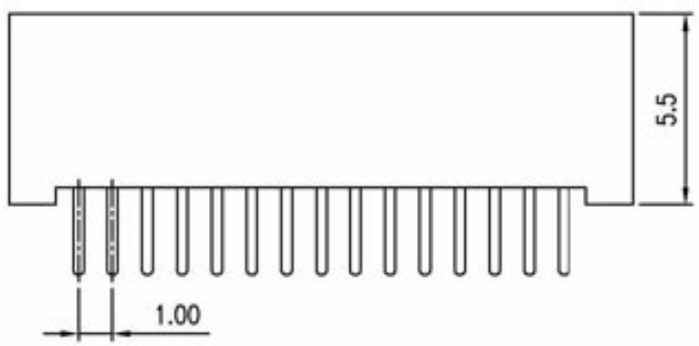

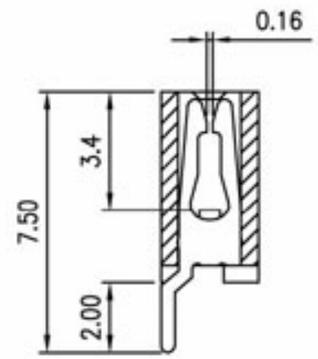

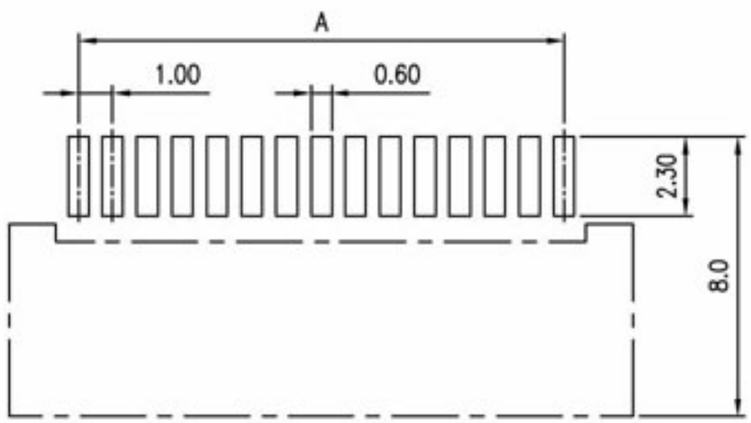

TOLERANCES:±0.05

RECOMMENDED PCB LAYOUT

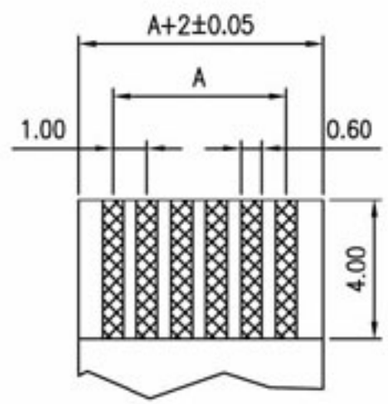

FPC/FFC T=0.30±0.05

■ MATERIAL

INSULATOR: GLASS-REINFORCED THERMOPLASTIC.
CONTACT: COPPER ALLOY.
PLATING: ALL TIN,LEAD FREE.

■ ELECTRICAL

CURRENT RATING: 0.5 AMP.
DIELECTRIC WITHSTANDING VOLTAGE: 500 VAC MIN.
INSULATION RESISTANCE: 1000 MEGAOHMS MIN.
CONTACT RESISTANCE: 30 MILLIOHMS MAX.

■ ENVIRONMENTAL

TEMPERATURE RANGE: -55°C TO 85°C.

■ PART NO.

BL118-XX R-0X

- BL118 — Series No.
- XX — No. Of Circuits
- R — RIGHT ANGLE 90° (PARALLE TYPE) (NORMAL TYPE)
- 0X — Packing Option: 2. Tube, 6. Reel

■ DIMENSION TABLE

Circuits	Dimension A	Dimension B	Dimension C	Circuits	Dimension A	Dimension B	Dimension C
2	1.00	3.1	5	20	19.00	21.1	23
3	2.00	4.1	6	21	20.00	22.1	24
4	3.00	5.1	7	22	21.00	23.1	25
5	4.00	6.1	8	23	22.00	24.1	26
6	5.00	7.1	9	24	23.00	25.1	27
7	6.00	8.1	10	25	24.00	26.1	28
8	7.00	9.1	11	26	25.00	27.1	29
9	8.00	10.1	12	27	26.00	28.1	30
10	9.00	11.1	13	28	27.00	29.1	31
11	10.00	12.1	14	29	28.00	30.1	32
12	11.00	13.1	15	30	29.00	31.1	33
13	12.00	14.1	16	31	30.00	32.1	34
14	13.00	15.1	17	32	31.00	33.1	35
15	14.00	16.1	18	33	32.00	34.1	36
16	15.00	17.1	19	34	33.00	35.1	37
17	16.00	18.1	20	35	34.00	36.1	38
18	17.00	19.1	21	36	35.00	37.1	39
19	18.00	20.1	22				

REV	ECN NO.	NAME	DATE	TOLERANCE LINEAR	TOLERANCE ANGLES
D		Willson	May.25.2006		
C		Willson	Feb.28.2005	X.±0.40	X°.±
B	93038	Willson	Dec.30.2004	.X±0.30	.X°±
A0		Willson	Dec.28.2004	.XX±0.20	.XX°±
				.XXX±0.10	.XXX°±

APPD: Jason
CHKD: Schumi
DRWN: Willson
MAT'L:
FINISH:
Q'TY:

TITLE: FPC/FFC 1.0 PITCH NON ZIF SIDE ENTRY DUAL CONTACT SMT TYPE - PARALLED PCB LAYOUT

PART NO. BL118-XX R

DWG NO. BL118-XX R

UNITS	SCALE	SHEET	REV
MM	1 : 1	1 OF 1	D

CUSTOMER